YORK®
Heating and Air Conditioning

TECHNICAL GUIDE

SINGLE PIECE VARIABLE SPEED AIR HANDLERS

FOR USE WITH SPLIT-SYSTEM COOLING & HEAT PUMPS

MODELS: AVG24 THRU 60*(C)

AHRI CERTIFIED™ www.ahridirectory.org

c UL® us LISTED

LIMITED WARRANTY TO CONSUMERS Good Housekeeping Promises REPLACEMENT OR REFUND IF DEFECTIVE

ISO 9000 REGISTRATION
ISO 9001
Certified Quality
Management System

Due to continuous product improvement,
specifications are subject to change without notice.

Visit us on the web at:

www.york.com

Additional rating information can be found at:

www.ahridirectory.org

DESCRIPTION

The Air Handler line offers the ultimate in comfort, sound and application flexibility. The models utilize a whisper quiet variable speed motor that provides humidity control and the lowest operating cost in the industry. The air handler is shipped ready to be installed in all positions, upflow, downflow, horizontal left or right, with minor adjustments. No special kits are required to install this deluxe product in any position.

All JCI Unitary Products air handlers and coils use a TXV to provide our customers with the optimum performance and refrigerant control required for 13 + Seer systems. Air handlers can be ordered with a R-410A TXV factory installed. Air handlers are also available with “Flex-coils” without a factory installed metering device, where for added flexibility, a R-22 or R-410A TXV can be field installed to meet your refrigerant choice.

FEATURE

Thermal Expansion Valve - Provides the ultimate refrigerant control required for today’s high efficient product. The UPG bolt-on TXV provides easy installation to convert the air handler to the required refrigerant, which is a true bolt-on design that does not require brazing to replace or install.

Insulated Cabinet - All air handler cabinets are thermally insulated with 1” foil faced insulation (R-4.2) to prevent sweating. For applications in extreme humidity conditions an optional, field installed, external insulating wrap kit is also available.

Factory - Sealed to achieve 2% or less leakage rate with or without field installed filter at 1.0” water gauge external static pressure.

Durable Finish Inside and Out - Air handler casings are made of pre-painted galvanized steel which provides a better paint to steel bond that resists corrosion and rust creep. All internal coil sheet metal parts are made of G90 galvanized or prepainted G30 galvainzed.

New 4 HK Heat Kit - Installation friendly, easy service, more robust, unique to new design.

ECM Variable Speed Motor - Designed for efficient, quiet operation with added indoor comfort control. With the use of a humidistat, the system will monitor the humidity in the home and automatically keep the desired humidity level in both winter and summer seasons. The ECM motor utilizes only 24% of the energy used by standard blower motors to reduce your overall heating and cooling costs.

Climate comfort system allows dealer to customize comfort settings based on regional location.

Communications - These models (C) may be connected as part of a communications system using a 4-wire connection bus.

DIMENSIONS

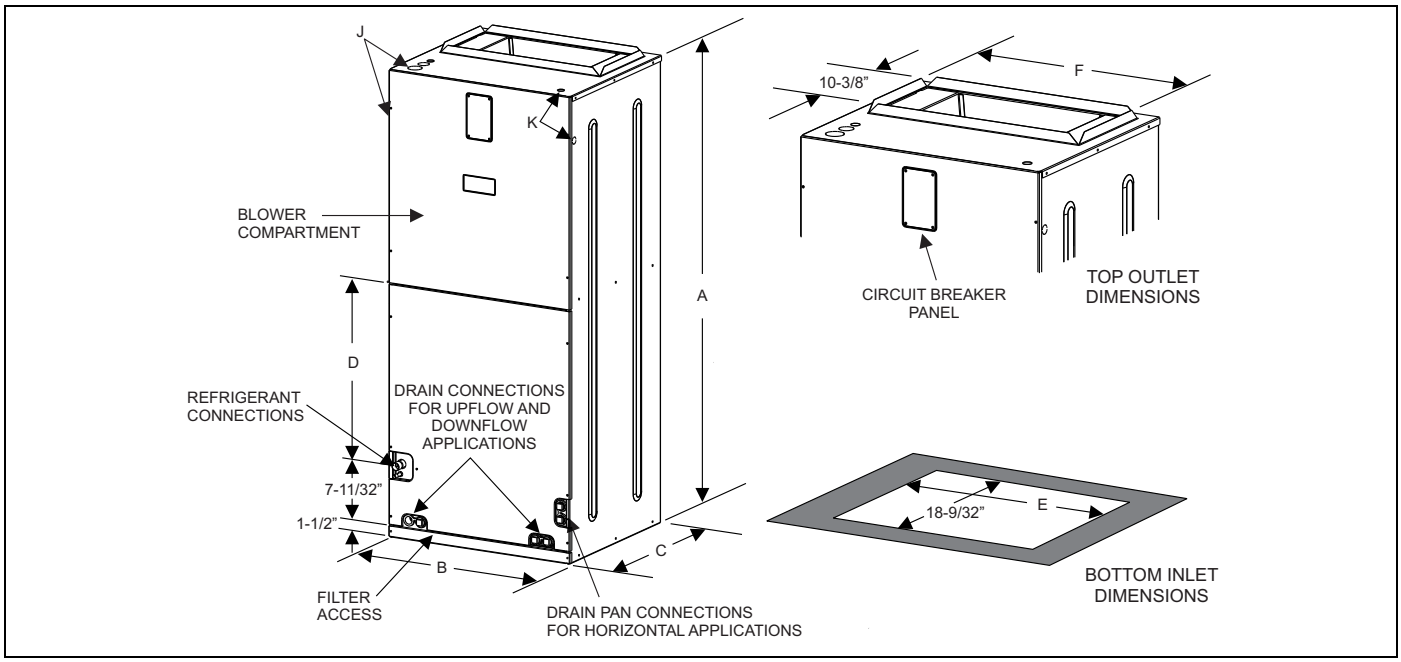

DIMENSIONS

Models	Dimensions (Inches)						Wiring Knockouts[1]		Refrigerant Connections Line Size	
	A	B	C	D	E	F	J	K		
	Height	Width	Depth				Power	Control	Liquid	Vapor
AVG24B**H21(C)	46	17.5	21.5	12-3/8	13-29/32	14-19/32	7/8" (1/2") 1 3/8" (1") 1 23/32" (1 1/4")	7/8" (1/2")	3/8"	3/4"
AVG36C**H21(C)	52	21		17-1/8	17-13/32	18-3/32				7/8"
AVG48D**H21(C)	57	24.5		22-1/8	20-29/32	21-19/32				7/8"
AVG60D**H21(C)	57	24.5		22-1/8	20-29/32	21-19/32				7/8'

1. Actual size (Conduit size).

** Thermal expansion device indicators - "3X" indicates unit is a "Flex Coil" models with a field installed R-22 or R-410A TXV, and "4_" indicates R-410A TXV is factory installed. Letter indicates TXV size as required, see outdoor unit technical information for proper matches and requirements.

COIL TECHNICAL DATA

Models	Application	Refrig. Conn. Types	Face Area (Sq. Ft.)	Rows Deep	Fin Per In.	Coil Size	Tube Geometry	Tube Dia.	Fin Type	TXV
AVG24B3XH21(C)	Cooling/ Heat Pump	Sweat	3.89	2	14	(2) 16 x 17.5	1 x 0.866	3/8	Enhanced	None
AVG24B4FH21(C)										4F
AVG24B4KH21(C)										4K
AVG36C3XH21(C)	Cooling/ Heat Pump	Sweat	4.86	3	12	(2) 20 x 17.5	1 x 0.866	3/8	Enhanced	None
AVG36C4FH21(C)										4F
AVG36C4GH21(C)										4G
AVG36C4HH21(C)										4H
AVG36C4KH21(C)										4K
AVG48D3XH21(C)	Cooling/ Heat Pump	Sweat	5.83	3	11	(2) 24 x 17.5	1 x 0.866	3/8	Enhanced	None
AVG48D4FH21(C)										4F
AVG48D4HH21(C)										4H
AVG48D4JH21(C)										4J
AVG48D4KH21(C)										4K
AVG60D3XH21(C)	Cooling/ Heat Pump	Sweat	5.83	3	11	(2) 24 x 17.5	1 x 0.866	3/8	Enhanced	None
AVG60D4HH21(C)										4H
AVG60D4JH21(C)										4J
AVG60D4KH21(C)										4K

Note: H models are available with a factory installed horizontal drain pan.

COOLING CAPACITY

Models	Rated CFM	Entering Air °F (Dry/Wet Bulb)	MBH@ Evaporator Temperature and Corresponding Pressure °F/PSIG			
			35/61.5	40/68.5	45/76.0	50/84.0
FULL-CASED "A" TYPE MULTI-POSITION						
AVG24B	800	85/72	35.0	31.8	28.4	24.7
		80/67	32.2	29.1	25.7	22.3
		75/62	26.4	23.4	21.0	17.1
		70/57	21.4	18.6	20.2	12.1
AVG36C	1200	85/72	51.3	46.7	41.7	36.8
		80/67	41.1	36.3	31.8	27.1
		75/62	32.1	27.0	29.4	21.9
		70/57	27.6	25.4	23.5	18.3
AVG48D	1600	85/72	100.5	86.4	72.0	56.8
		80/67	80.4	67.5	55.0	42.1
		75/62	62.7	49.9	40.7	34.0
		70/57	53.9	47.2	36.81	28.71
AVG60D	1850	85/72	119.9	101.0	82.0	62.2
		80/67	96.0	79.2	62.6	45.8
		75/62	74.8	58.6	46.2	37.0
		70/57	64.3	55.4	43.2	33.7

APPLICATION FACTORS - RATED CFM VS. ACTUAL CFM

% Of Rated Airflow	80%	90%	Rated CFM	110%	120%
Capacity Factor	0.96	0.98	1.00	1.02	1.03

PHYSICAL & ELECTRICAL DATA - COOLING ONLY (60 Hz)

Models		AVG24B	AVG36C	AVG48D	AVG60D
Blower - Diameter x Width		10 x 7	10 x 7	10 x 10	10 x 10
Motor	HP	1/3	1/2	3/4	1
	Nominal RPM	1200	1200	1200	1200
Voltage		230			
Amps	Full Load (230)	2.8	4.3	5.5	7.0
Filter[1]	Type	DISPOSABLE OR PERMANENT			
	Size	16 x 20 x1	20 x 20 x1	22 x 20 x1	22 x 20 x1
	Permanent Type Kit	1PF0601BK	1PF0602BK	1PF0603BK	1PF0603BK
Shipping/Operating Weight (lbs.)		140/134	170/164	196/185	199/188

1. Field supplied.

ELECTRICAL DATA - COOLING ONLY (60 Hz)

Models	Total Motor Amps		Minimum Circuit Ampacity		Max. O.C.P. Amps/Type[1]	Minimum Wire Size A.W.G.
	60 Hertz		60 Hertz			
	208V	230V	208V	230V		
AVG24B	3.2	2.8	4.0	3.5	15	14
AVG36C	4.7	4.3	5.9	5.4	15	14
AVG48D	6.1	5.0	7.6	6.9	15	14
AVG60D	7.8	7.0	9.7	8.8	15	14

1. OCP = Over Current Protection device, must be HACR type Circuit Breaker or Time Delay fuse.

ELECTRICAL DATA - 208/230-1-60

Models	Heat Kits*	Max. Static	Min. Speed Tap	Total Heat[1]				kW Staging					
				KW		MBH		W1 Only		W2 Only		W1 & W2	
				208v	230v	208v	230v	208v	230v	208v	230v	208v	230v
AVG24B	4HK*6500206	0.5	Heat-D	1.9	2.5	6.4	8.5	1.9	2.5	1.9	2.5	1.9	2.5
	4HK*6500506	0.5	Heat-D	3.6	4.8	12.3	16.4	3.6	4.8	3.6	4.8	3.6	4.8
	4HK*6500806	0.5	Heat-C	5.6	7.5	19.2	25.6	2.8	3.75	5.6	7.5	5.6	7.5
	4HK*6501006	0.5	Heat-B	7.2	9.6	24.6	32.8	3.6	4.8	7.2	9.6	7.2	9.6
	4HK16501306	0.5	Heat A	9.8	13	33.3	44.4	3.3	4.3	6.5	8.7	9.8	13
	4HK165N1506	0.5	Heat-A	10.8	14.4	36.9	49.1	3.6	4.8	7.2	9.6	10.8	14.4
AVG36C	4HK*6500506	0.5	Heat-C	3.6	4.8	12.3	16.4	3.6	4.8	3.6	4.8	3.6	4.8
	4HK*6500806	0.5	Heat-C	5.6	7.5	19.2	25.6	2.8	3.75	5.6	7.5	5.6	7.5
	4HK*6501006	0.5	Heat-C	7.2	9.6	24.6	32.8	3.6	4.8	7.2	9.6	7.2	9.6
	4HK16501306	0.5	Heat C	9.8	13	33.3	44.4	3.3	4.3	6.5	8.7	9.8	13
	4HK16501506	0.5	Heat-C	10.8	14.4	36.9	49.1	3.6	4.8	7.2	9.6	10.8	14.4
	4HK16501806	0.5	Heat-A	13.2	17.6	45.1	60.1	3.3	4.4	6.6	8.8	13.2	17.6
AVG48D	4HK*6500506	0.5	Heat-D	3.6	4.8	12.3	16.4	3.6	4.8	3.6	4.8	3.6	4.8
	4HK*6500806	0.5	Heat-C	5.6	7.5	19.2	25.6	2.8	3.75	5.6	7.5	5.6	7.5
	4HK*6501006	0.5	Heat-C	7.2	9.6	24.6	32.8	3.6	4.8	7.2	9.6	7.2	9.6
	4HK16501306	0.5	Heat C	9.8	13	33.3	44.4	3.3	4.3	6.5	8.7	9.8	13
	4HK16501506	0.5	Heat-C	10.8	14.4	36.9	49.1	3.6	4.8	7.2	9.6	10.8	14.4
	4HK16501806	0.5	Heat-B	13.2	17.6	45.1	60.1	3.3	4.4	6.6	8.8	13.2	17.6
	4HK16502006	0.5	Heat-B	14.4	19.2	49.2	65.5	3.6	4.8	7.2	9.6	14.4	19.2
	4HK16502506	0.5	Heat-B	18.0	24.0	61.5	81.9	3.6	4.8	10.8	14.4	18.0	24
AVG60D	4HK*6500506	0.5	Heat-D	3.6	4.8	12.3	16.4	3.6	4.8	3.6	4.8	3.6	4.8
	4HK*6500806	0.5	Heat-D	5.6	7.5	19.2	25.6	2.8	3.75	5.6	7.5	5.6	7.5
	4HK*6501006	0.5	Heat-C	7.2	9.6	24.6	32.8	3.6	4.8	7.2	9.6	7.2	9.6
	4HK16501306	0.5	Heat C	9.8	13	33.3	44.4	3.3	4.3	6.5	8.7	9.8	13
	4HK16501506	0.5	Heat-C	10.8	14.4	36.9	49.1	3.6	4.8	7.2	9.6	10.8	14.4
	4HK16501806	0.5	Heat-C	13.2	17.6	45.1	60.1	3.3	4.4	6.6	8.8	13.2	17.6
	4HK16502006	0.5	Heat-C	14.4	19.2	49.2	65.5	3.6	4.8	7.2	9.6	14.4	19.2
	4HK16502506	0.5	Heat-C	18.0	24.0	61.5	81.9	3.6	4.8	10.8	14.4	18.0	24.0

1. See conversion Table below.
* May be 0 (no breaker) or 1 (with breaker).

KW & MBH CONVERSIONS - FOR TOTAL POWER INPUT REQUIREMENT

FOR	208V	OPERATION MULTIPLY	240V	TABULATED KW & MBH BY	.751
	230V		240V		.918
	220V		240V		.840

COMFORT SETTINGS SELECTION

Delay Tap	Comfort Setting
A	Normal
B	Humid
C	Dry
D	Temperate

ELECTRICAL DATA (FOR SINGLE SOURCE POWER SUPPLY) - COPPER WIRE 208/230-1-60

Models	Heat Kit - Single Phase*	Heater Amps 240V	Field Wiring					
			Min. Circuit Ampacity		Max. O.C.P. Amps/Type[1]		75°C Wire Size - AWG	
			208V	230V	208V	230V	208V	230V
AVG24B	4HK*6500206	10.4	15.28	16.53	20	20	12	12
	4HK*6500506	20.0	25.67	28.50	30	30	10	10
	4HK*6500806	31.3	37.85	42.63	45	45	8	8
	4HK*6501006	40.0	47.33	53.50	50	60	8	6
	4HK16501306	54.2	62.6	71.3	70	80	4	2
	4HK165N1506	60.0	69.00	78.50	70	90	4	3
AVG36C	4HK*6500506	20.0	27.54	30.38	30	35	10	10
	4HK*6500806	31.3	39.73	44.50	45	45	8	8
	4HK*6501006	40.0	49.21	55.38	50	60	8	6
	4HK16501306	54.2	64	72.8	70	80	4	2
	4HK16501506	60.0	70.88	80.38	70	90	4	3
	4HK16501806	73.3	85.32	97.00	90	100	4	3
AVG48D	4HK*6500506	20.0	29.29	31.88	35	35	8	8
	4HK*6500806	31.3	41.48	46.00	45	50	8	8
	4HK*6501006	40.0	50.96	56.88	60	60	6	6
	4HK16501306	54.2	66.4	75.2	70	80	4	2
	4HK16501506	60.0	72.63	81.88	90	90	3	3
	4HK16501806	73.3	87.07	98.50	90	100	3	2
	4HK16502006	80.0	94.29	106.88	100	125	3	1
	4HK16502506	100.0	115.96	131.88	125	150	1	1/0
AVG60D*	4HK*6500506	20.0	31.42	33.75	35	35	8	8
	4HK*6500806	31.3	43.60	47.88	45	50	8	8
	4HK*6501006	40.0	53.08	58.75	60	60	6	6
	4HK16501306	54.2	68.4	77.2	70	80	4	2
	4HK16501506	60.0	74.75	83.75	90	90	3	3
	4HK16501806	73.3	89.19	100.38	90	110	3	2
	4HK16502006	80.0	96.42	108.75	100	125	3	1
	4HK16502506	100.0	118.08	133.75	125	150	1	1/0

1. O.C.P. = Over Current Protection device, must be HACR type Circuit Breaker or Time Delay fuse.

* May be 0 (no breaker) or 1 (with breaker).

ELECTRICAL DATA (FOR MULTI SOURCE POWER SUPPLY) - COPPER WIRE 208/230-1-60

Models	Heater Model	Min. Circuit Ampacity			Max. O.C.P. Amps/Type[1]			75°C Wire Size - AWG		
		Circuit			Circuit			Circuit		
		1st	2nd	3rd	1st	2nd	3rd	1st	2nd	3rd
		208/230	208/230	208/230	208/230	208/230	208/230	208/230	208/230	208/230
AVG24B	4HK16501306	43.1/48.6	19.5/22.5	–	45/50	20/25	–	6/6	12/10	–
	4HK165N1506	47.5/53.5	21.7/25.0	–	50/60	25/25	–	8/6	10/10	–
AVG36C	4HK16501306	41.7/47.9	22.4/25.0	–	50/50	30/30	–	6/6	12/10	–
	4HK16501506	48.5/55.4	21.7/25.0	–	50/60	25/25	–	8/6	10/10	–
	4HK16501806	44.9/51.2	39.8/45.8	–	45/60	40/50	–	8/8	8/8	–
AVG48D	4HK16501306	42.9/49.1	23.6/26.2	–	50/50	30/30	–	6/6	12/10	–
	4HK16501506	51.0/56.9	21.7/25.0	–	60/60	25/25	–	6/6	10/10	–
	4HK16501806	47.4/52.7	39.8/45.8	–	50/60	40/60	–	6/6	8/6	–
	4HK16502006	51.0/56.9	43.4/50.0	–	60/60	45/50	–	6/6	8/8	–
	4HK16502506	51.0/56.9	43.4/50.0	21.7/25.0	60/60	45/50	25/25	6/6	8/8	10/10
AVG60D	4HK16501306	43.9/50.1	24.6/27.2	–	50/60	30/30	–	6/6	10/10	–
	4HK16501506	53.1/58.8	21.7/25.0	–	60/60	25/25	–	6/6	10/10	–
	4HK16501806	49.5/54.6	39.8/45.8	–	50/60	40/60	–	6/6	8/6	–
	4HK16502006	53.1/58.8	43.4/50.0	–	60/60	45/50	–	6/6	8/8	–
	4HK16502506	53.1/58.8	43.4/50.0	21.7/25.0	60/60	45/50	25/25	6/6	8/8	10/10

1. O.C.P. = Over Current Protection device, must be HACR type Circuit Breaker or Time Delay fuse.

ELECTRICAL DATA - 208/230-3-60

Models	Heat Kit - Three Phase	Max. Static	Min. Speed Tap	Total Heat[1]				KW Staging					
				KW		MBH		W1 Only		W2 Only		W1 + W2	
				208V	230V	208V	230V	208V	230V	208V	230V	208V	230V
AVG24B	4HK06501025	0.5	Heat-B	7.2	9.6	24.6	32.8	7.2	9.6	7.2	9.6	7.2	9.6
AVG36C	4HK06501025	0.5	Heat-C	7.2	9.6	24.6	32.8	7.2	9.6	7.2	9.6	7.2	9.6
	4HK06501525	0.5	Heat-C	10.8	14.4	36.9	49.1	10.8	14.4	10.8	14.4	10.8	14.4
AVG48D	4HK06501025	0.5	Heat-C	7.2	9.6	24.6	32.8	7.2	9.6	7.2	9.6	7.2	9.6
	4HK06501525	0.5	Heat-C	10.8	14.4	36.9	49.1	10.8	14.4	10.8	14.4	10.8	14.4
	4HK06501825	0.5	Heat-B	12.9	17.2	44.7	58.7	12.9	17.2	12.9	17.2	12.9	17.2
AVG60D	4HK06501025	0.5	Heat-C	7.2	9.6	24.6	32.8	7.2	9.6	7.2	9.6	7.2	9.6
	4HK06501525	0.5	Heat-C	10.8	14.4	36.9	49.1	10.8	14.4	10.8	14.4	10.8	14.4
	4HK16502525	0.5	Heat-C	18.0	24.0	61.4	81.4	9.0	12.0	18.0	24.0	18.0	24.0

1. See conversion table on Page 4.

ELECTRICAL DATA (FOR SINGLE SOURCE POWER SUPPLY) - COPPER WIRE 208/230-3-60

Models	Heat Kit - Three Phase	Heater Amps 240V	Field Wiring					
			Min. Circuit Ampacity		Max. O.C.P.[1] Amps/Type		75°C Wire Size - AWG	
			208V	230V	208V	230V	208V	230V
AVG24B	4HK06501025	23.1	28.5	32.4	30	35	10	8
AVG36C	4HK06501025	23.1	30.4	34.3	30	35	10	8
	4HK06501525	34.7	42.9	48.8	45	50	8	8
AVG48D	4HK06501025	23.1	31.3	35.1	35	35	8	8
	4HK06501525	34.7	43.8	49.6	45	50	8	8
	4HK06501825	41.4	51.0	58.0	60	60	6	6
AVG60D	4HK06501025	23.1	33.8	37.6	35	40	8	8
	4HK06501525	34.7	46.3	52.1	50	60	8	6

1. O.C.P. = Over Current Protection device, must be HACR type Circuit Breaker or Time Delay fuse.

ELECTRICAL DATA (FOR MULTI SOURCE POWER SUPPLY) - COPPER WIRE 208/230-3-60

Models	Heater Model	Minimum Circuit Ampacity			Max. O.C.P.[1] Amps/Type			75°C Wire Size - AWG		
		Circuit								
		1st	2nd	3rd	1st	2nd	3rd	1st	2nd	3rd
		208/230	208/230	208/230	208/230	208/230	208/230	208/230	208/230	208/230
AVG60D	4HK16502525	41.0/44.9	31.3/36.1	-/-	45/45	35/40	-/-	8/8	8/8	-/-

1. O.C.P. = Over Current Protection device, must be HACR type Circuit Breaker or Time Delay fuse.

TYPICAL APPLICATIONS WITH MC MULTI-POSITION COILS

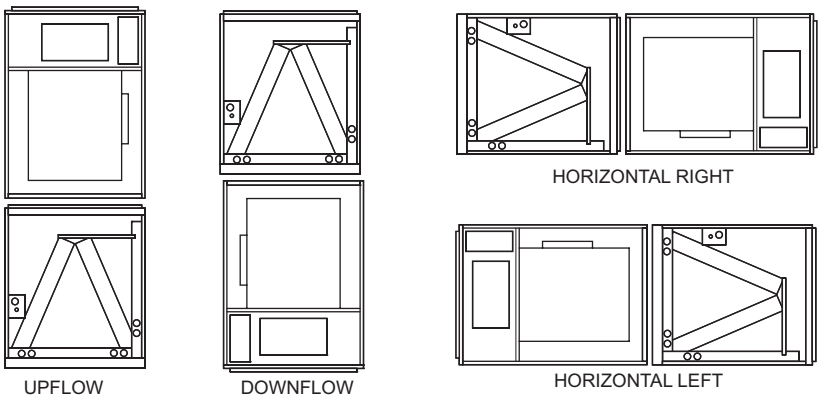

ACCESSORIES

Refer to Price Manual for specific model numbers where not shown.

TXV Kits - TXV kits are available for “Flex-coil” applications and converting R-22 to R-410A or as a service replacement. All kits are bolt-on and require no brazing to install.

Electric Heaters - 4HK models shown under electrical data include sequential operation and temperature dual limit switches for safe, efficient operation. Circuit breakers are provided where shown.

External Insulating Wrap Kit - Provides a vinyl covered thermal insulation wrap, providing additional thermal insulation protection to prevent sweating in applications where extreme high humidity is present. Air Handler cover (or wrap) has Velcro edges for easy installation and access.

S1-1JV0117

S1-1JV0121

S1-1JV0124

Humidstat - S1-2HU16700124

Control when used with ECM variable speed models will monitor humidity level in both winter and summer seasons. Adjusts blower speed and airflow provided to maintain desired humidity levels.

LIMITATIONS

These units must be wired and installed in accordance with all national and local safety codes.

Voltage limits are as follows:

Air Handler Voltage	Voltage code	[1]Normal Operating Voltage Range
208/230-1-60	06	187-253

1. Rated in accordance with ARI Standard 110, utilization range “A”.

Airflow must be within the minimum and maximum limits approved for electric heat, evaporator coils and outdoor units.

Entering Air Temperature Limits			
Wet Bulb Temp.°F		Dry Bulb Temp. °F	
Min.	Max.	Min.	Max.
57	72	65	95

CONVENTIONAL CONTROL WIRING (24 VAC)

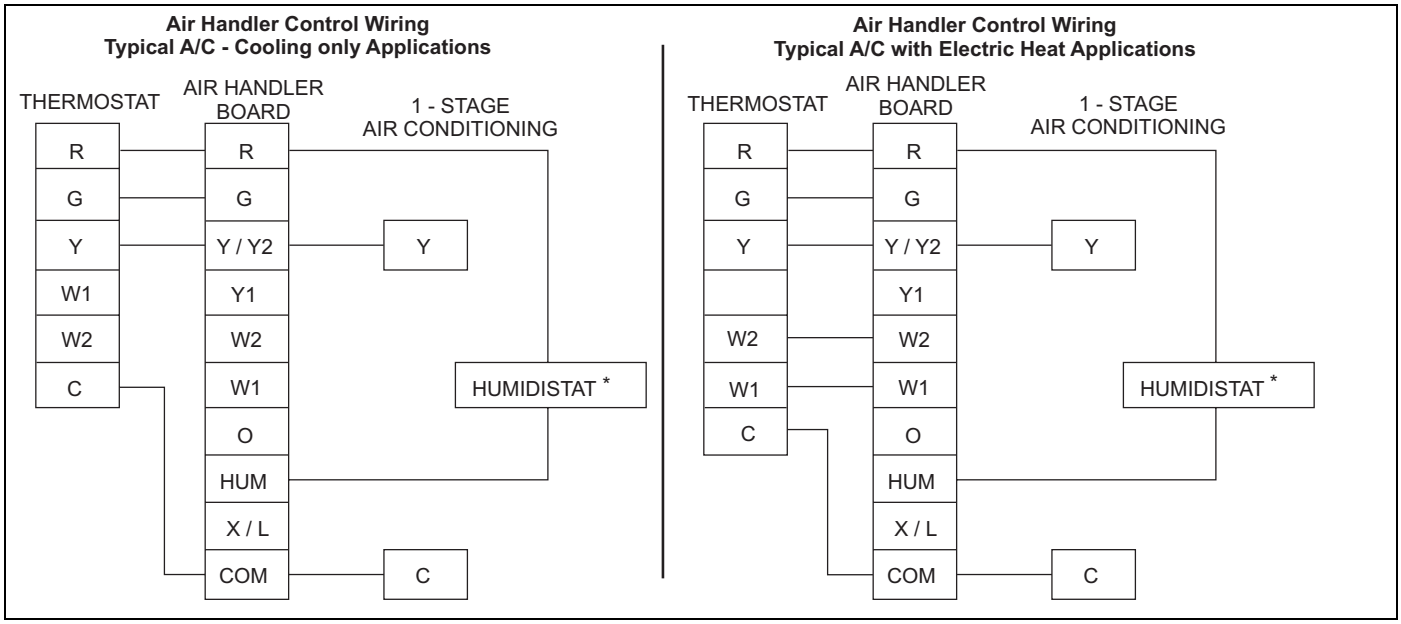

* Optional dehumidification humidistat switch contacts open on humidity rise.

NOTES:

1. “Y/Y2” Terminal on air handler control board must be connected for full CFM and applications requiring 60 second blower off delay for SEER enhancement.
2. Remove humidistat jumper on air handler control board.
3. For heat pump applications - set MODE jumper on air handler control board to the HP position.
4. To change quantity of heat during HP defrost cycle - reverse connections at W1 and W2 on air handler control board.

TWO STAGE COOLING WIRING (24 VAC)

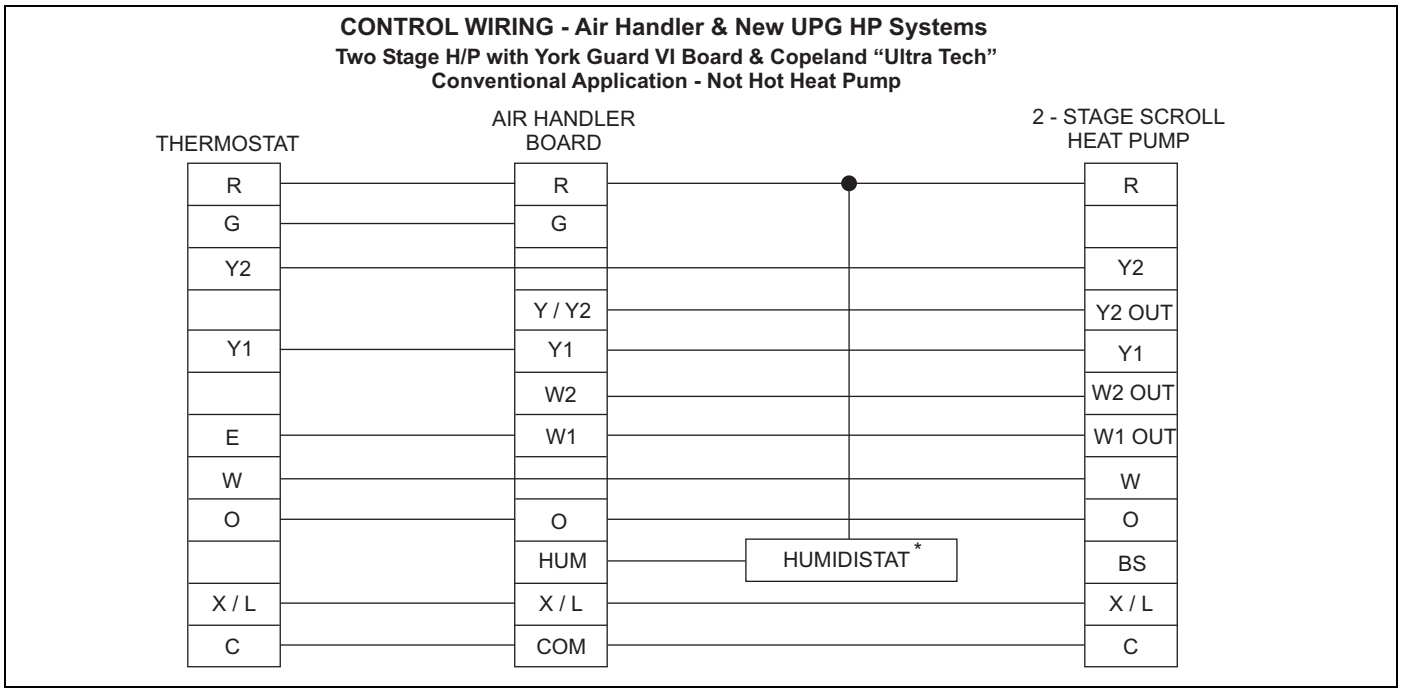

* Optional dehumidification humidistat switch contacts open on humidity rise.

NOTES:

1. "Y/Y2" Terminal on air handler control board must be connected for full CFM and applications requiring 60 second blower off delay for SEER enhancement.
2. Remove humidistat jumper on air handler control board.
3. For heat pump applications - set MODE jumper on air handler control board to the HP position.
4. To change quantity of heat during HP defrost cycle - reverse connections at W1 and W2 on air handler control board.

CONTROL WIRING USING COMMUNICATION

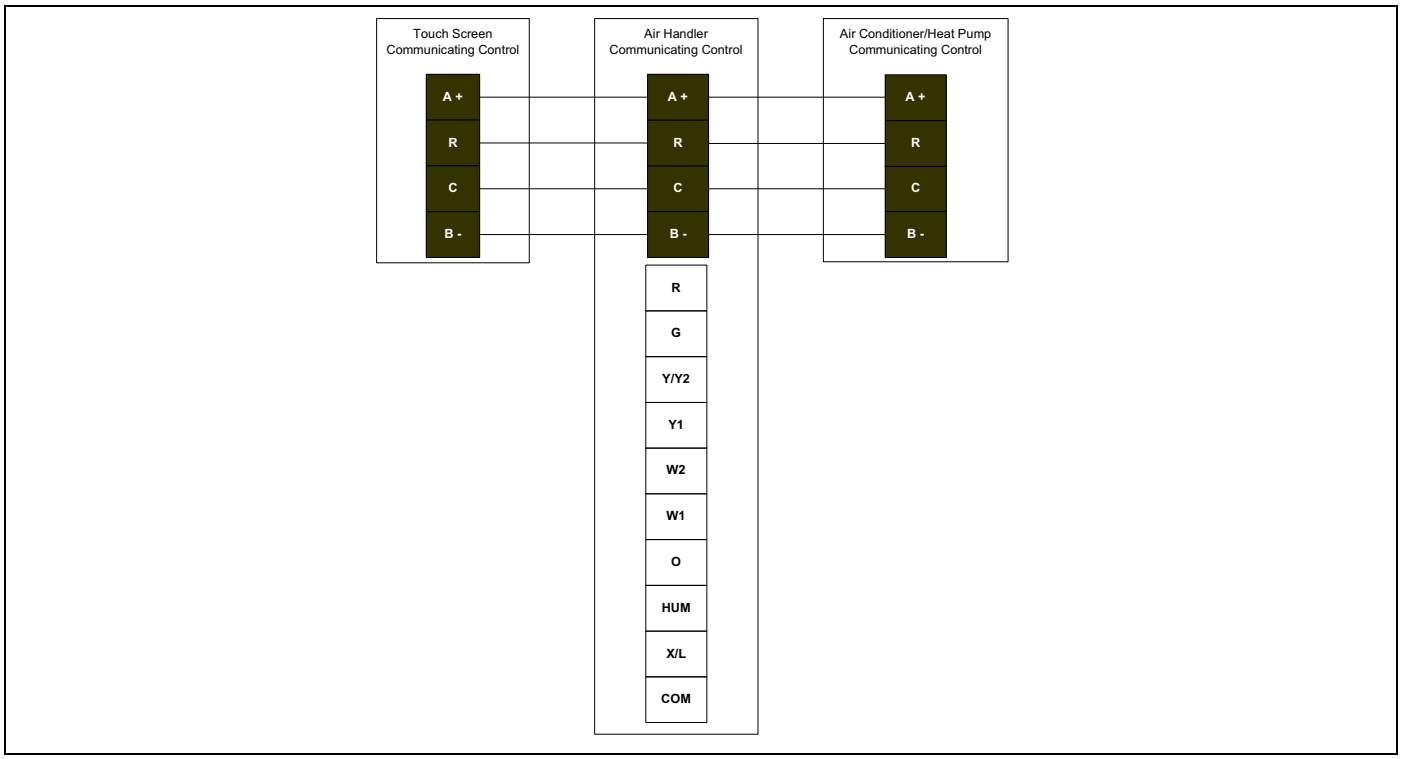

AIR FLOW

Air Handler Air Flow Data

HIGH/LOW SPEED COOLING AND HEAT PUMP AIRFLOW					
CFM				JUMPER SETTINGS	
24B		36C			
High	Low	High	Low	COOL Tap	ADJ Tap
1088	707	1387	905	A	B
830	542	1151	753	B	B
948	617	1201	783	A	A
716	465	1009	657	B	A
854	556	1086	703	A	C
612	462	953	622	C	B
637	460	901	588	B	C
531	460	754	493	D	B
542	462	831	540	C	A
462	462	657	460	D	A
474	460	751	494	C	C
461	464	588	461	D	C
48D		60D		JUMPER SETTINGS	
High	Low	High	Low	COOL Tap	ADJ Tap
2138	1442	2364	1545	A	B
1759	1162	1962	1271	B	B
2009	1311	2123	1374	A	A
1612	1052	1763	1146	B	A
1773	1166	1905	1237	A	C
1530	989	1777	1158	C	B
1459	947	1580	1021	B	C
1359	886	1596	1030	D	B
1388	904	1583	1019	C	A
1221	806	1413	929	D	A
1244	808	1412	926	C	C
1118	715	1277	841	D	C

HIGH/LOW SPEED ELECTRIC HEAT AIRFLOW					
CFM				JUMPER SETTINGS	
24B		36C			
High	Low	High	Low	HEAT Tap	ADJ Tap
1088	828	1387	908	A	Any
954	714	1228	804	B	Any
829	614	1151	756	C	Any
678	523	923	609	D	Any
48D		60D		JUMPER SETTINGS	
High	Low	High	Low	HEAT Tap	ADJ Tap
2111	1417	2363	1488	A	Any
1858	1252	2174	1252	B	Any
1480	985	1868	1061	C	Any
1250	840	1387	823	D	Any

1. Airflow at nominal voltage, bottom return at 0.5 external static pressure, tested without filter installed, dry coil conditions.
2. These units have variable speed motors that automatically adjust to provide constant CFM from 0.0” to 0.6” w.c. static pressure.
3. From 0.6” to 1.0” static pressure, CFM is reduced by 2% per 0.1” increase in static.
4. Operation on duct systems with greater than 1.0” w.c. external static pressure is not recommended.
5. Both the COOL and the ADJUST tap must be set to obtain the cooling airflow desired (CFM).
6. The ADJ tap does not affect the HEAT tap setting.
7. Low speed cooling used only with two stage outdoor units. (Speed is preset to 65% of high speed).
8. Dehumidification speed is 85% of jumper selected COOL tap and ADJUST tap.
9. When operating in both heat pump and electric heat modes, the airflow (CFM) will be per HEAT Tap CFM values only.
10. At some settings, LOW COOL and/or LOW HEAT airflow may be lower than what is required to operate an airflow switch on certain models of electronic air cleaners. Consult the instructions for the electronic air cleaner for further details.
11. Airflow (CFM) indicator light (LED2) flashes once for every 100 CFM (i.e.: 12 Flashes is 1200 CFM) – blinks are approximate +/- 10% of actual CFM.

NOTES

659575-YTG-A-1010
Supersedes: Nothing

Johnson Controls Unitary Products
5005 York Drive
Norman, OK 73069